100% MADE IN ITALY

THE “HARD DUTY” LINE

GIULIANO

AUTOMOTIVE EQUIPMENT

THE REAL “WORK-HORSE” FOR YOUR TYRE SHOP!!

WWW.GIULIANO-AUTOMOTIVE.COM

GROUP GIULIANO S.p.A.

GIULIANO
AUTOMOTIVE EQUIPMENT

THE HARD DUTY LINE

THE REAL "WORK-HORSE" FOR YOUR TYRE SHOP!!

NEW

MAXI PRO GT

RACING SEMI-AUTOMATIC SWING ARM TYRE CHANGER

Suitable for PRESS ARM to ease mounting operations of low profiled and UHP tyres (optional):

Motoinverter

MOTOINVERTER
Faster, more accurate and reliable drive for your tyre changer.

COMING SOON...

Discover on our website!

100% Made in Italy

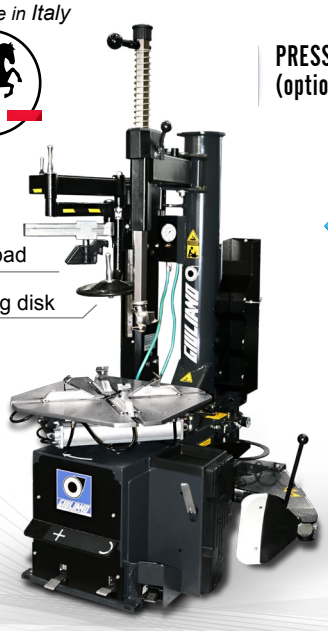

PRESS ARM (optional)

Bead pressing pad

Bead lifting disk

Available in 3ph-2 speed, 1ph-2 speed (inverter) and 1ph - 1 speed version

- Vertical tower with built-in air tank
- Extra-high tower for extra wide tyres, swinging horizontal arm with Ø 41 mm operating arm
- Fitting head designed for both standard and low profiled tyre applications

GT System

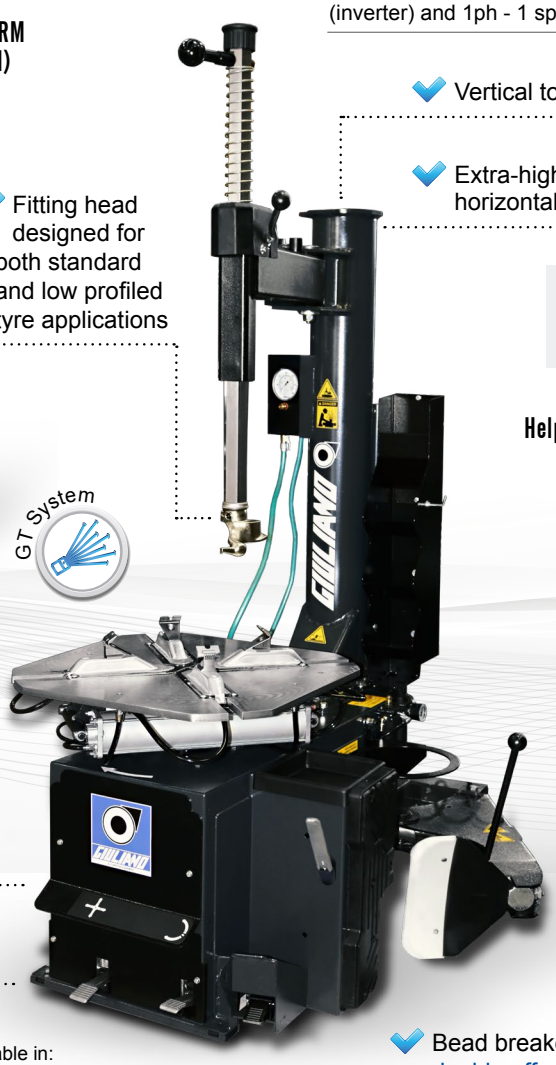

Suitable for HELP Maxi Pro and PRESS ARM Maxi Pro (optional):

Help and PRESS ARM (optional)

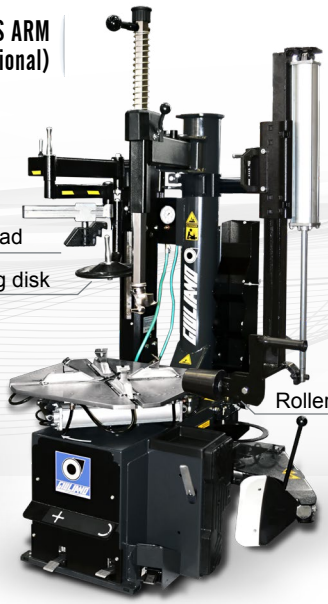

Bead pressing pad

Bead lifting disk

Roller tool

- Bead seating jet blast from jaws and Tyre inflation by pedal (standard)
- Tabletop thickness 14 mm w/adjust. jaws
- Reinforced Chassis and Tower
- "Easy Access" extractable pedal box for quick service

Intensive use

220V-1ph Inverter

Available in:
- Blue Trim
- BlackTrim
- Red Trim

- Bead breaker double effect Cylinder ø 200 mm.

5 YEAR WARRANTY ON GEARBOX

STANDARD FEATURES

Rim clamping from outside	10" - 24" *
Rim clamping from inside	12" - 26" *
Max. tyre diameter	1100 mm (43")
Max. tyre width	390 mm (15")
Bead breaker cylinder force at 10 Bar	30800 N
Operating pressure	10 Bar (145 Psi)
Power supply	220V - 1ph - Inverter (STND) 400V - 3ph, 2 speed, 110V - 1ph (OPT)
Motor power	0,75 kW (2 speed)
Rotation speed	7 - 16 rpm
Pre-set tyre inflating pressure	3,5 Bar (50 Psi)
Net weight	340 kg
Max. overall dimensions	1390 x 1310 x 2160 mm

** By adjustable jaws*

STANDARD ACCESSORIES

EXTENSIVE SELECTION OF STANDARD ACCESSORIES

Bead lifting lever • Lube paste bucket and Brush • Plastic protectors for mounting/demounting tool • 2 Protectors for bead breaker shovel • Jaw protectors for alloy rims • Lubricator + Pressure regulator • Bucket support • Mounting Head

GIULIANO
AUTOMOTIVE EQUIPMENT

THE HARD DUTY LINE

THE REAL "WORK-HORSE" FOR YOUR TYRE SHOP!!

NEW

MAXI PRO CP

RACING SEMI-AUTOMATIC SWING ARM CENTER POST TYRE CHANGER

COMING SOON...

Discover on our website!

Suitable for PRESS ARM to ease mounting operations of low profiled and UHP tyres (optional):

Motoinverter

MOTOINVERTER
Faster, more accurate and reliable drive for your tyre changer.

Available in 3ph-2 speed, 1ph-2 speed (inverter) and 1ph - 1 speed version

100% Made in Italy

PRESS ARM (optional)

- Fitting head designed for both standard and low profiled tyre applications
- Vertical tower with built-in air tank
- Extra-high tower for extra wide tyres, swinging horizontal arm with Ø 41 mm operating arm

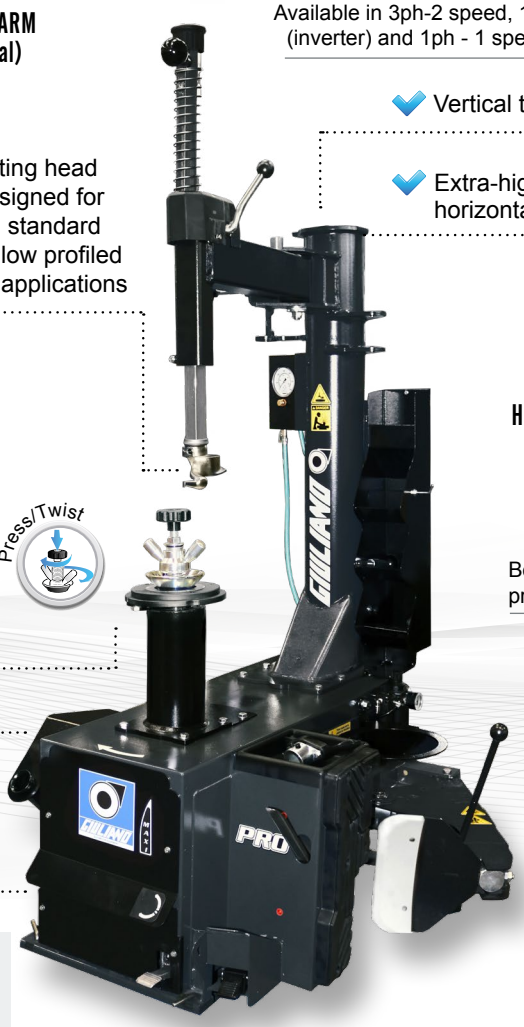

- Manual Press/Twist clamping device
- Tyre inflation by pedal (standard)
- Reinforced Chassis and Tower
- "Easy Access" extractable pedal box for quick service

Suitable for HELP Maxi Pro and PRESS ARM Maxi Pro (optional):

Help and PRESS ARM (optional)

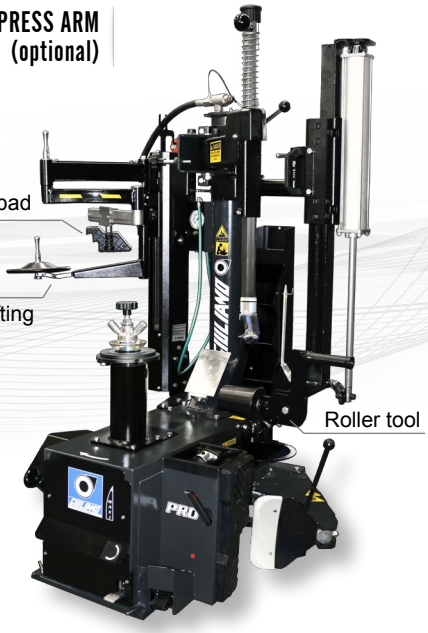

Suitable for Tubeless tyre bead seating system (optional)

- Bead breaker double effect Cylinder ø 200 mm.

Intensive use

220V-1ph Inverter

Available in:
- Blue Trim
- BlackTrim
- Red Trim

5 YEAR WARRANTY ON GEARBOX

STANDARD FEATURES

Rim clamping range	10" - 26"
Max. tyre diameter	1100 mm (43")
Max. tyre width	390 mm (15")
Bead breaker cylinder force at 10 Bar	30800 N
Operating pressure	10 Bar (145 Psi)
Power supply	220V - 1ph - Inverter (STND) 400V - 3ph, 2 speed, 110V - 1ph (OPT)
Motor power	0,75 kW (2 speed)
Rotation speed	7 - 16 rpm
Pre-set tyre inflating pressure	3,5 Bar (50 Psi)
Net weight	298 kg
Max. overall dimensions	1390 x 1310 x 2160 mm

STANDARD ACCESSORIES

EXTENSIVE SELECTION OF STANDARD ACCESSORIES

Bead lifting lever • Lube paste bucket and Brush • Plastic protectors for mounting/demounting tool • 2 Protectors for bead breaker shovel • Lubricator + Pressure regulator • Bucket support • Mounting Head • Press/Twist clamping device • 2 Plastic protections for clamping device • 2 Rubber protections for clamping chuck

GIULIANO
AUTOMOTIVE EQUIPMENT

THE HARD DUTY LINE

THE REAL "WORK-HORSE" FOR YOUR TYRE SHOP!!

S228

RACING SUPER-AUTOMATIC TILT BACK TYRE CHANGER

5 YEAR WARRANTY ON GEARBOX

Discover on our website!

Suitable for Tubeless tyre bead seating system (optional)

100% Made in Italy

- Robotic pipe for operating arm positioning/lock
- Reinforced Chassis and Tower
- Tyre inflation by pedal (standard)
- Fitting head designed for both standard and low profiled tyre applications

Suitable for **Patented QX Leverless** mounting device for low profiled and UHP tyres (optional)

- Tabletop thickness 14 mm

A very practical **Wheel Lifter** reduces effort and increases productivity (optional).

- "Easy Access" extractable pedal box for quick service
- Double rotation speed by pedal

High Volume

400V-3ph 2V

Available in:
- Blue Trim
- BlackTrim
- Red Trim

Motoinverter

MOTOINVERTER
Faster, more accurate and reliable drive for your tyre changer.

Available in 3ph-2 speed, 1ph-2 speed (inverter) and 1ph - 1 speed version

S228 PRO

HP4 (standard)

Technical specs (see S228)
Dimensions 1590x1890x2040 mm
Net weight 350 kg

- Tilting tower, sliding horizontal arm with ø 41 mm operating arm

Patented **PO SYSTEM** (standard) automatically moves the bead breaker shovel back to the starting position, after its penetration.

- Bead breaker double effect Cylinder ø 200 mm.
- Adjustable bead breaker shovel stroke.

STANDARD FEATURES

Rim clamping from outside	10" - 24" *
Rim clamping from inside	12" - 26" *
Max. tyre diameter	1100 mm (43")
Max. tyre width	415 mm (16")
Bead breaker cylinder force at 10 Bar	30800 N
Operating pressure	10 bar (145 Psi)
Power supply	400V-3ph-2 speed 220V-1ph/220V-1ph-2 speed
Motor power	0,8 / 1,1 kW (3 ph)
Rotation speed	7 - 14 rpm
Pre-set tyre inflating pressure	3,5 bar (50 Psi)
Net weight	265 kg
Max. overall dimensions	1170x1890x2040 mm

** By adjustable jaws*

STANDARD ACCESSORIES

EXTENSIVE SELECTION OF STANDARD ACCESSORIES

Bead lifting lever • Lube paste bucket and Brush • Plastic protectors for mounting/demounting tool • 2 Protectors for bead breaker shovel • Jaw protectors for alloy rims • Lubricator + Pressure regulator • Bucket support

GIULIANO
AUTOMOTIVE EQUIPMENT

THE HARD DUTY LINE

THE REAL "WORK-HORSE" FOR YOUR TYRE SHOP!!

NEW

SX228 PRO

RACING SUPER-AUTOMATIC TILT BACK TYRE CHANGER WITH DUAL ASSIST ARM AND POWER X

Suitable for Tubeless tyre bead seating system (optional)

Motoinverter

MOTOINVERTER
Faster, more accurate and reliable drive for your tyre changer.

Available in 3ph-2 speed, 1ph-2 speed (inverter) and 1ph - 1 speed version

COMING SOON...

Discover on our website!

5 YEAR WARRANTY

5 YEAR WARRANTY ON POWERX
5 YEAR WARRANTY ON GEARBOX

100% Made in Italy

- Robotic pipe for operating arm positioning/lock
- Reinforced Chassis and Tower
- Tyre inflation by pedal (standard)
- Fitting head designed for both standard and low profiled tyre applications
- Tools Storage Box (standard)

POWER X grants double (uniform) clamping power on jaws, and an almost endless durability and reliability of your turntable!!!

- Tabletop thickness 14 mm w/**POWER X** four cylinders clamping system [**Giuliano Patent**].

A very practical **Wheel Lifter** reduces effort and increases productivity (optional).

- Double rotation speed by pedal

Intensive use

400V-3ph 2V

"Easy Access" extractable pedal box for quick service

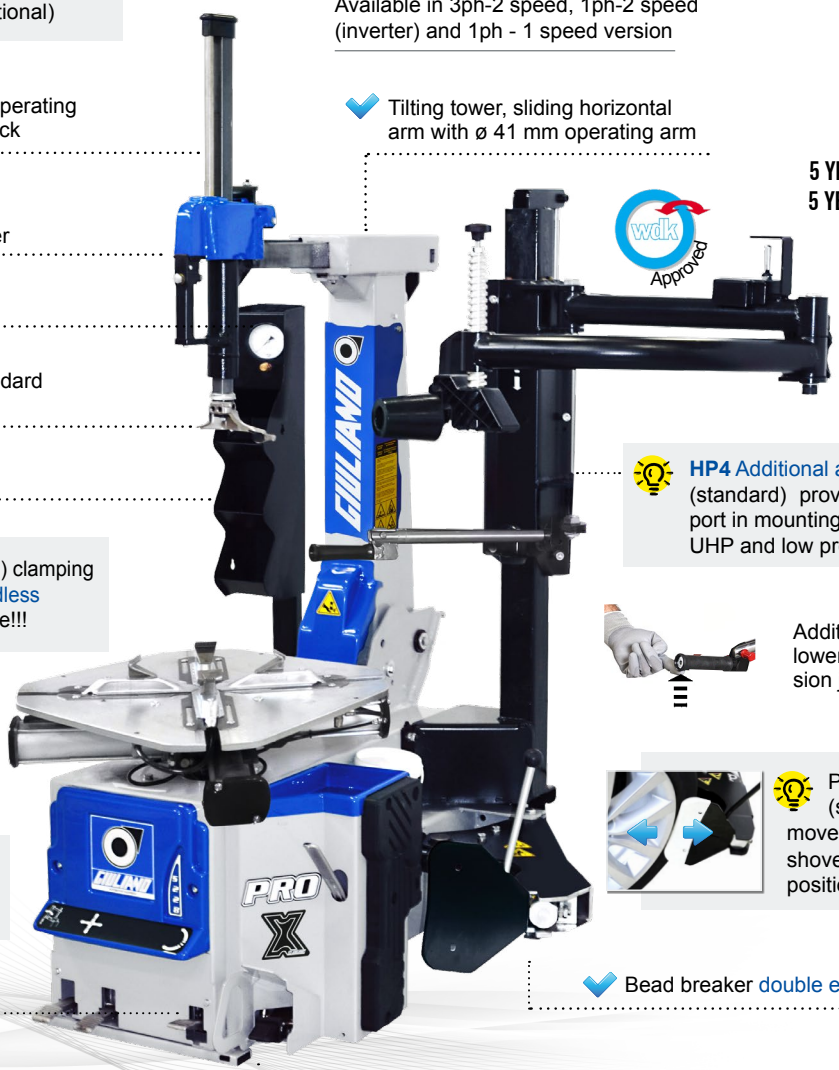

- Tilting tower, sliding horizontal arm with ø 41 mm operating arm

wdk Approved

Available in:
- Blue Trim
- BlackTrim
- Red Trim

HP4 Additional auxiliary helper system (standard) provides a valuable support in mounting/demounting Run Flat, UHP and low profiled tyres.

Additional tilting roller tool for lower bead with an anti-collision joint.

Patented **PO SYSTEM** (standard) automatically moves the bead breaker shovel back to the starting position, after its penetration.

- Bead breaker double effect Cylinder ø 200 mm.
- Adjustable bead breaker shovel stroke.

STANDARD FEATURES

Rim clamping from outside	10" - 27"
Rim clamping from inside	12" - 29"
Max. tyre diameter	1100 mm (43")
Max. tyre width	415 mm (16")
Bead breaker cylinder force at 10 Bar	30800 N
Operating pressure	10 bar (145 Psi)
Power supply	400V-3ph-2 speed 220V-1ph/220V-1ph-2 speed
Motor power	0,8 / 1,1 kW (3 ph)
Rotation speed	7 - 14 rpm
Pre-set tyre inflating pressure	3,5 bar (50 Psi)
Net weight	360 kg
Max. overall dimensions	1590x1930x2040 mm

STANDARD ACCESSORIES

EXTENSIVE SELECTION OF STANDARD ACCESSORIES

Bead lifting lever • Lube paste bucket and Brush • Plastic protectors for mounting/demounting tool • 2 Protectors for bead breaker shovel • Jaw protectors for alloy rims • Lubricator + Pressure regulator • Bucket support

GIULIANO
AUTOMOTIVE EQUIPMENT

THE HARD DUTY LINE

THE REAL "WORK-HORSE" FOR YOUR TYRE SHOP!!

NEW

SX228 PRO LNL

RACING SUPER-AUTOMATIC LEVER - NO LEVER TILT BACK TYRE CHANGER WITH DUAL ASSIST ARM AND POWER X

COMING SOON...

Discover on our website!

Suitable for Tubeless tyre bead seating system (optional)

Motoinverter

MOTOINVERTER
Faster, more accurate and reliable drive for your tyre changer.

Available in 3ph-2 speed, 1ph-2 speed (inverter) and 1ph - 1 speed version

5 YEAR WARRANTY

5 YEAR WARRANTY ON POWERX
5 YEAR WARRANTY ON GEARBOX

100% Made in Italy

- Robotic pipe for operating arm positioning/lock
- Tools Storage Box (standard)
- Tyre inflation by pedal (standard)
- **Lever-No-Lever** tyre mounting / demounting system [**Giuliano Patent**], (standard).

POWER X grants double (uniform) clamping power on jaws, and an almost endless durability and reliability of your turntable!!!

- Tabletop thickness 14 mm with **POWER X** four cylinders clamping system [**Giuliano Patent**].
- Reinforced Chassis and Tower
- "Easy Access" extractable pedal box for quick service
- Double rotation speed by pedal

- Tilting tower, sliding horizontal arm with ø 41 mm operating arm

wdk Approved

Available in:
- Blue Trim
- BlackTrim
- Red Trim

HP4 DUAL ASSIST ARM (standard):
- Bead Pressing Roller
- Bead Lifting Roller
- Bead Pressing Pad

LNL SYSTEM [**Patented**] can work either with or without bead lifting lever

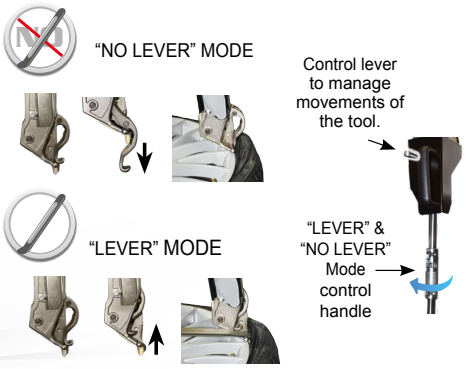

Intensive use

400V-3ph 2V

- Bead breaker double effect Cylinder ø 200 mm.
- Adjustable bead breaker shovel stroke.

Patented **PO SYSTEM** (standard) automatically moves the bead breaker shovel back to the starting position, after its penetration.

STANDARD FEATURES

Rim clamping from outside	10" - 27"
Rim clamping from inside	12" - 29"
Max. tyre diameter	1100 mm (43")
Max. tyre width	415 mm (16")
Bead breaker cylinder force at 10 Bar	30800 N
Operating pressure	10 bar (145 Psi)
Power supply	400V-3ph-2 speed 220V-1ph/220V-1ph-2 speed
Motor power	0,8 / 1,1 kW (3 ph)
Rotation speed	7 - 14 rpm
Pre-set tyre inflating pressure	3,5 bar (50 Psi)
Net weight	380 kg
Max. overall dimensions	1590x1930x2160 mm

STANDARD ACCESSORIES

EXTENSIVE SELECTION OF STANDARD ACCESSORIES

Bead lifting lever • Lube paste bucket and Brush • Plastic protectors for LNL mounting/demounting tool • 2 Protectors for bead breaker shovel • Jaw protectors for alloy rims • Lubricator + Pressure regulator • Bucket support

GIULIANO
AUTOMOTIVE EQUIPMENT

THE HARD DUTY LINE

THE REAL "WORK-HORSE" FOR YOUR TYRE SHOP!!

NEW

SX228 PRO DUO

RACING SUPER-AUTOMATIC TILT BACK TYRE CHANGER WITH COMBINED TWO ASSIST ARMS AND POWER X

COMING SOON...

Discover on our website!

Suitable for Tubeless tyre bead seating system (optional)

Motoinverter

MOTOINVERTER
Faster, more accurate and reliable drive for your tyre changer.

Available in 3ph-2 speed, 1ph-2 speed (inverter) and 1ph - 1 speed version

5 YEAR WARRANTY

5 YEAR WARRANTY ON POWERX
5 YEAR WARRANTY ON GEARBOX

100% Made in Italy

- Robotic pipe for operating arm positioning/lock
- Tyre inflation by pedal (standard)
- Tilting tower, sliding horizontal arm with ø 41 mm operating arm

wdk Approved

Available in:
- Blue Trim
- BlackTrim
- Red Trim

- Reinforced Chassis and Tower
- Fitting head designed for both standard and low profiled tyre applications
- Tabletop thickness 14 mm with **POWER X** four cylinders clamping system [**Giuliano Patent**].

Equipped with **Help** and **Press Arm** powerful pneumatic helper systems, to enhance tyre changer's performance and provide a valuable support in mounting/demounting most difficult tyre applications in the market, such as Run Flat, UHP and low profiled tyres.

POWER X grants double (uniform) clamping power on jaws, and an almost endless durability and reliability of your turntable!!!

Patented **PO SYSTEM** (standard) automatically moves the bead breaker shovel back to the starting position, after its penetration.

- "Easy Access" extractable pedal box for quick service
- Bead breaker double effect Cylinder ø 200 mm.

Intensive use

400V-3ph 2V

A very practical **Wheel Lifter** reduces effort and increases productivity (optional).

- Double rotation speed by pedal
- Adjustable bead breaker shovel stroke.

STANDARD FEATURES

Rim clamping from outside	10" - 27"
Rim clamping from inside	12" - 29"
Max. tyre diameter	1100 mm (43")
Max. tyre width	415 mm (16")
Bead breaker cylinder force at 10 Bar	30800 N
Operating pressure	10 bar (145 Psi)
Power supply	400V-3ph-2 speed 220V-1ph/220V-1ph-2 speed
Motor power	0,8 / 1,1 kW (3 ph)
Rotation speed	7 - 14 rpm
Pre-set tyre inflating pressure	3,5 bar (50 Psi)
Net weight	390 kg
Max. overall dimensions	1950x1930x2040 mm

STANDARD ACCESSORIES

EXTENSIVE SELECTION OF STANDARD ACCESSORIES

Bead lifting lever • Lube paste bucket and Brush • Plastic protectors for mounting/demounting tool • 2 Protectors for bead breaker shovel • Jaw protectors for alloy rims • Lubricator + Pressure regulator • Bucket support

GIULIANO
AUTOMOTIVE EQUIPMENT

THE HARD DUTY LINE

THE REAL "WORK-HORSE" FOR YOUR TYRE SHOP!!

NEW

SX228 PRO DUO LNL

RACING SUPER-AUTOMATIC LEVER - NO LEVER TILT BACK TYRE CHANGER WITH COMBINED TWO ASSIST ARMS AND POWER X

COMING SOON...

Discover on our website!

Suitable for Tubeless tyre bead seating system (optional)

Motoinverter

MOTOINVERTER
Faster, more accurate and reliable drive for your tyre changer.

Available in 3ph-2 speed, 1ph-2 speed (inverter) and 1ph - 1 speed version

5 YEAR WARRANTY

5 YEAR WARRANTY ON POWERX
5 YEAR WARRANTY ON GEARBOX

100% Made in Italy

- Robotic pipe for operating arm positioning/lock
- Reinforced Chassis and Tower
- Tilting tower, sliding horizontal arm with ø 41 mm operating arm

Available in:
- Blue Trim
- BlackTrim
- Red Trim

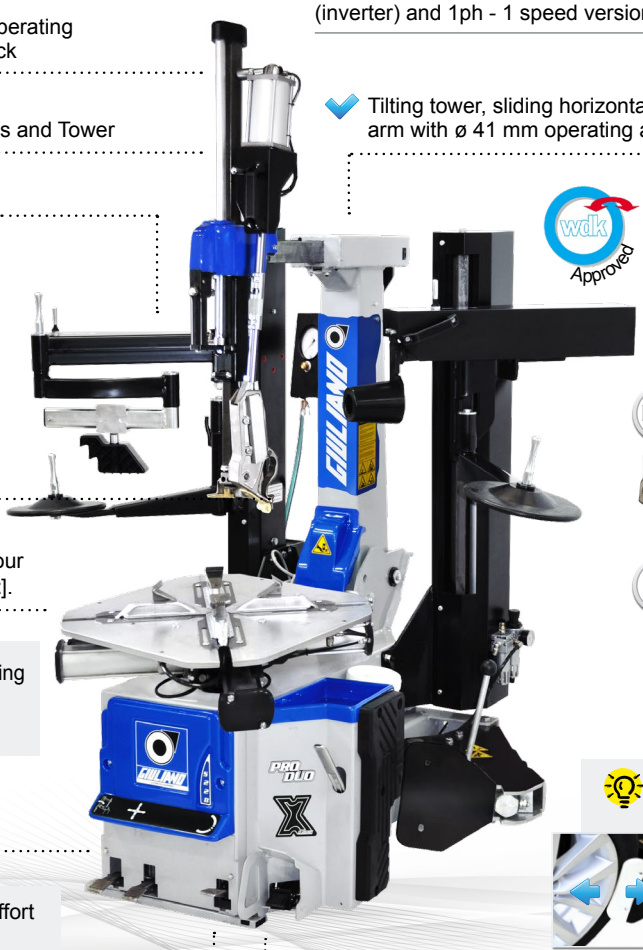

wdk Approved

Equipped with **Help** and **Press Arm** powerful pneumatic helper systems, to enhance tyre changer's performance and provide a valuable support in mounting/demounting most difficult tyre applications in the market, such as Run Flat, UHP and low profiled tyres.

LNL SYSTEM
[Patented] can work either with or without bead lifting lever

- **Lever-No-Lever** tyre mounting/demounting system [**Giuliano Patent**], (standard).
- Tabletop thickness 14 mm with **POWER X** four cylinders clamping system [**Giuliano Patent**].

"NO LEVER" MODE

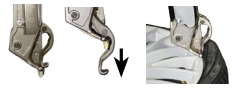

"LEVER" MODE

Control lever to manage movements of the tool.

"LEVER" & "NO LEVER" Mode control handle

POWER X grants double (uniform) clamping power on jaws, and an almost endless durability and reliability of your turntable!!!

- "Easy Access" extractable pedal box for quick service

Patented **PO SYSTEM** (standard) automatically moves the bead breaker shovel back to the starting position, after its penetration.

A very practical **Wheel Lifter** reduces effort and increases productivity (optional).

Intensive use

400V-3ph 2V

- Double rotation speed by pedal
- Tyre inflation by pedal (standard)
- Bead breaker double effect Cylinder ø 200 mm.
- Adjustable bead breaker shovel stroke.

STANDARD FEATURES

Rim clamping from outside	10" - 27"
Rim clamping from inside	12" - 29"
Max. tyre diameter	1100 mm (43")
Max. tyre width	415 mm (16")
Bead breaker cylinder force at 10 Bar	30800 N
Operating pressure	10 bar (145 Psi)
Power supply	400V-3ph-2 speed 220V-1ph/220V-1ph-2 speed
Motor power	0,8 / 1,1 kW (3 ph)
Rotation speed	7 - 14 rpm
Pre-set tyre inflating pressure	3,5 bar (50 Psi)
Net weight	410 kg
Max. overall dimensions	1950x1930x2160 mm

STANDARD ACCESSORIES

EXTENSIVE SELECTION OF STANDARD ACCESSORIES

Bead lifting lever • Lube paste bucket and Brush • Plastic protectors for mounting/demounting tool • 2 Protectors for bead breaker shovel • Jaw protectors for alloy rims • Lubricator + Pressure regulator • Bucket support

GIULIANO
AUTOMOTIVE EQUIPMENT

THE HARD DUTY LINE

THE REAL "WORK-HORSE" FOR YOUR TYRE SHOP!!

NEW

SX234 PRO

HIGH PERFORMANCE SUPER-AUTOMATIC TILT BACK TYRE CHANGER WITH DUAL ASSIST ARM AND POWERX

COMING SOON...

Discover on our website!

Suitable for Tubeless tyre bead seating system (optional)

Motoinverter

MOTOINVERTER
Faster, more accurate and reliable drive for your tyre changer.

Available in 3ph-2 speed, 1ph-2 speed (inverter) and 1ph - 1 speed version

5 YEAR WARRANTY

5 YEAR WARRANTY ON POWERX
5 YEAR WARRANTY ON GEARBOX

100% Made in Italy

Robotic pipe for operating arm positioning/lock

Reinforced Chassis and Tower

Tilting tower, sliding horizontal arm with ø 41 mm operating arm

Available in:
- Blue Trim
- BlackTrim
- Red Trim

QuadraLock system for total stiff locking of horizontal and operating arm.

QuadraLock system removes every possible flexion or slack during operations with **UHP** and **Run Flat tyres**, thus granting the same performance level over time.

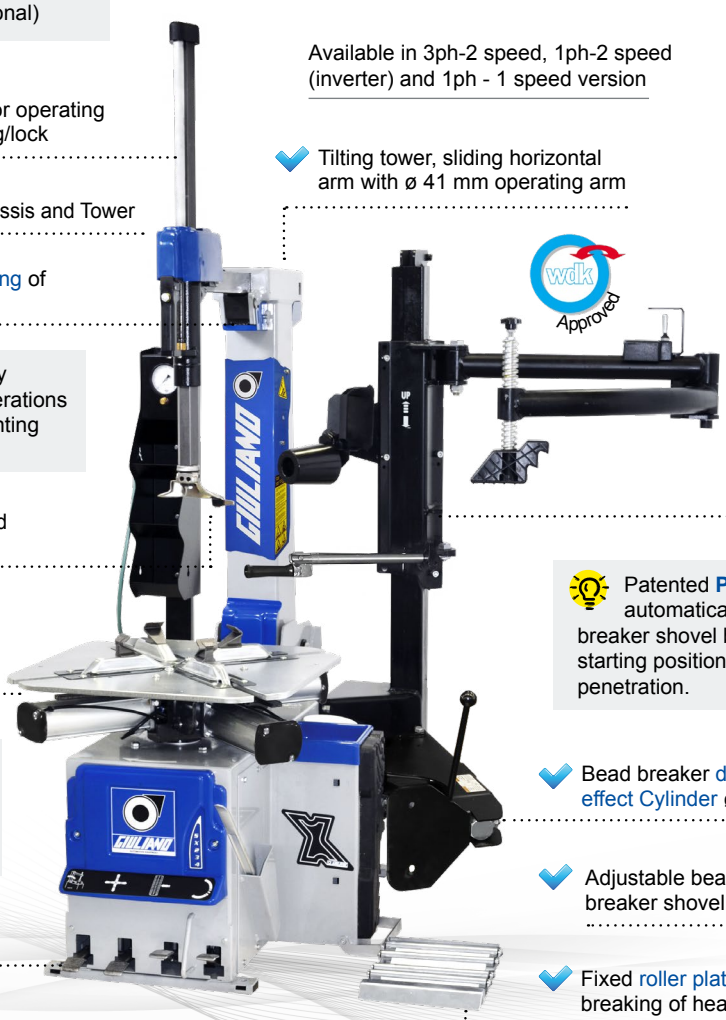

wdk Approved

HP4 DUAL ASSIST ARM (standard):
- Bead Pressing Roller
- Bead Lifting Roller
- Bead Pressing Pad

Fitting head designed for both standard and low profiled tyre applications

Tabletop thickness 14 mm with **POWER X** four cylinders clamping system [**Giuliano Patent**].

Patented **PO SYSTEM** (standard) automatically moves the bead breaker shovel back to the starting position, after its penetration.

POWER X grants double (uniform) clamping power on jaws, and an almost endless durability and reliability of your turntable!!!

Bead breaker double effect Cylinder ø 200 mm.

Adjustable bead breaker shovel stroke.

"Easy Access" extractable pedal box for quick service

Fixed roller plate, to ease bead breaking of heavy wheels (standard)

Intensive use

220V-1ph 2V

Double rotation speed by pedal

Tyre inflation by pedal (standard)

A very practical **Wheel Lifter** reduces effort and increases productivity (optional).

STANDARD FEATURES

Rim clamping from outside	10" - 27"
Rim clamping from inside	12" - 29"
Max. tyre diameter	1120 mm (44")
Max. tyre width	406 mm (16")
Bead breaker cylinder force at 10 Bar	30800 N
Operating pressure	10 bar (145 Psi)
Power supply	220V-1ph-2 speed
Motor power	0,75 kW (1ph)
Rotation speed	7-16 rpm
Pre-set tyre inflating pressure	3,5 bar (50 Psi)
Net weight	385 kg
Max. overall dimensions	1610x1950x2190 mm

STANDARD ACCESSORIES

EXTENSIVE SELECTION OF STANDARD ACCESSORIES

Bead lifting lever • Lube paste bucket and Brush • Plastic protectors for mounting/demounting tool • 2 Protectors for bead breaker shovel • Jaw protectors for alloy rims • Lubricator + Pressure regulator • Bucket support

GIULIANO
AUTOMOTIVE EQUIPMENT

THE HARD DUTY LINE

THE REAL "WORK-HORSE" FOR YOUR TYRE SHOP!!

NEW

SX234 PRO LNL

HIGH PERFORMANCE SUPER-AUTOMATIC LEVER - NO LEVER TILT BACK TYRE CHANGER WITH DUAL ASSIST ARM AND POWERX

COMING SOON...

Discover on our website!

5 YEAR WARRANTY

5 YEAR WARRANTY ON POWERX
5 YEAR WARRANTY ON GEARBOX

Suitable for Tubeless tyre bead seating system (optional)

Motoinverter

MOTOINVERTER
Faster, more accurate and reliable drive for your tyre changer.

Available in 3ph-2 speed, 1ph-2 speed (inverter) and 1ph - 1 speed version

100% Made in Italy

- Robotic pipe for operating arm positioning/lock
- Reinforced Chassis and Tower
- Tilting tower, sliding horizontal arm with ø 41 mm operating arm
- QuadraLock system for total stiff locking of horizontal and operating arm.
- **Lever-No-Lever** tyre mounting/demounting system [**Giuliano Patent**], (standard).

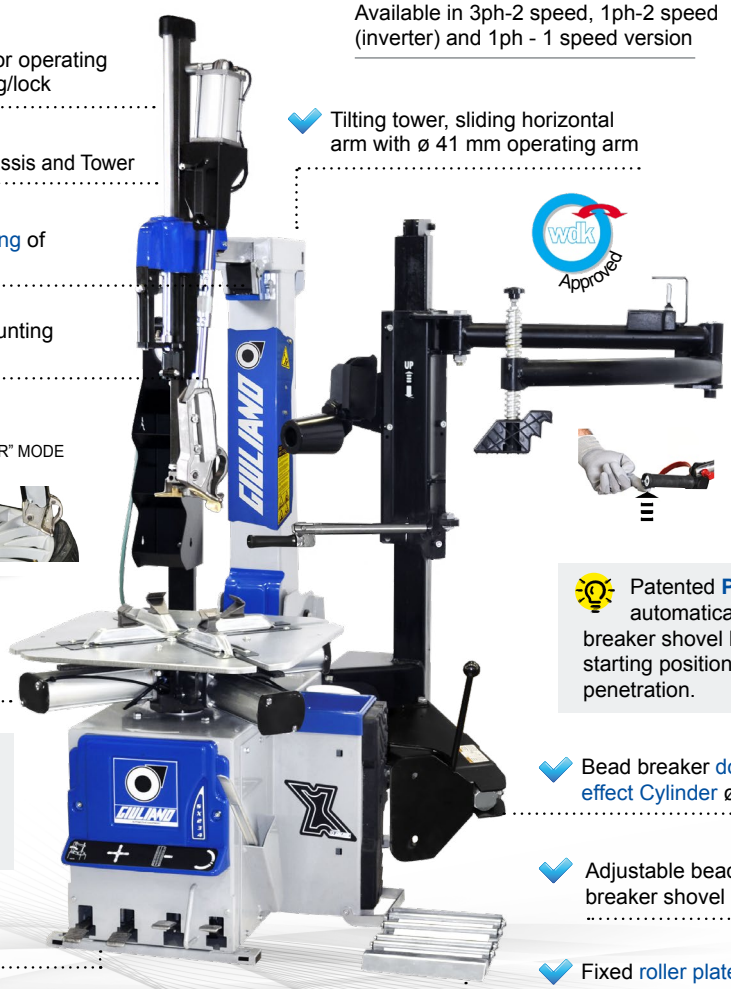

Available in:
- Blue Trim
- BlackTrim
- Red Trim

HP4 DUAL ASSIST ARM (standard):
- Bead Pressing Roller
- Bead Lifting Roller
- Bead Pressing Pad

Additional tilting roller tool for lower bead with an anti-collision joint.

- Tabletop thickness 14 mm with **POWER X** four cylinders clamping system [**Giuliano Patent**].

Patented **PO SYSTEM** (standard) automatically moves the bead breaker shovel back to the starting position, after its penetration.

POWER X grants double (uniform) clamping power on jaws, and an almost endless durability and reliability of your turntable!!!

- Bead breaker double effect Cylinder ø 200 mm.

- Adjustable bead breaker shovel stroke.
- "Easy Access" extractable pedal box for quick service
- Fixed roller plate, to ease bead breaking of heavy wheels (standard)

Intensive use

220V-1ph 2V

- Double rotation speed by pedal
- Tyre inflation by pedal (standard)

A very practical **Wheel Lifter** reduces effort and increases productivity (optional).

STANDARD FEATURES

Rim clamping from outside	10" - 27"
Rim clamping from inside	12" - 29"
Max. tyre diameter	1120 mm (44")
Max. tyre width	406 mm (16")
Bead breaker cylinder force at 10 Bar	30800 N
Operating pressure	10 bar (145 Psi)
Power supply	220V-1ph-2 speed
Motor power	0,75 kW (1ph)
Rotation speed	7-16 rpm
Pre-set tyre inflating pressure	3,5 bar (50 Psi)
Net weight	405 kg
Max. overall dimensions	1610x1950x2190 mm

STANDARD ACCESSORIES

EXTENSIVE SELECTION OF STANDARD ACCESSORIES

Bead lifting lever • Lube paste bucket and Brush • Plastic protectors for mounting/demounting tool • 2 Protectors for bead breaker shovel • Jaw protectors for alloy rims • Lubricator + Pressure regulator • Bucket support

GIULIANO
AUTOMOTIVE EQUIPMENT

THE HARD DUTY LINE

THE REAL "WORK-HORSE" FOR YOUR TYRE SHOP!!

NEW

SX234 PRO DUO

HIGH PERFORMANCE SUPER-AUTOMATIC TILT BACK TYRE CHANGER WITH COMBINED TWO ASSIST ARMS AND POWERX

COMING SOON...

Discover on our website!

5 YEAR WARRANTY

5 YEAR WARRANTY ON POWERX
5 YEAR WARRANTY ON GEARBOX

Available in:
- Blue Trim
- BlackTrim
- Red Trim

Suitable for Tubeless tyre bead seating system (optional)

Motoinverter

MOTOINVERTER
Faster, more accurate and reliable drive for your tyre changer.

Available in 3ph-2 speed, 1ph-2 speed (inverter) and 1ph - 1 speed version

100% Made in Italy

Robotic pipe for operating arm positioning/lock

QuadraLock system for total stiff locking of horizontal and operating arm.

Tilting tower, sliding horizontal arm with ø 41 mm operating arm

wdk Approved

Reinforced Chassis and Tower

Fitting head designed for both standard and low profiled tyre applications

Equipped with **Help** and **Press Arm** powerful pneumatic helper systems, to enhance tyre changer's performance and provide a valuable support in mounting/demounting most difficult tyre applications in the market, such as Run Flat, UHP and low profiled tyres.

Tabletop thickness 14 mm with **POWER X** four cylinders clamping system [**Giuliano Patent**].

Patented **PO SYSTEM** (standard) automatically moves the bead breaker shovel back to the starting position, after its penetration.

POWER X grants double (uniform) clamping power on jaws, and an almost endless durability and reliability of your turntable!!!

Bead breaker double effect Cylinder ø 200 mm.

"Easy Access" extractable pedal box for quick service

Adjustable bead breaker shovel stroke.

Fixed roller plate, to ease bead breaking of heavy wheels (standard)

Intensive use

220V-1ph 2V

Double rotation speed by pedal

Tyre inflation by pedal (standard)

A very practical **Wheel Lifter** reduces effort and increases productivity (optional).

STANDARD FEATURES

Rim clamping from outside	10" - 27"
Rim clamping from inside	12" - 29"
Max. tyre diameter	1120 mm (44")
Max. tyre width	406 mm (16")
Bead breaker cylinder force at 10 Bar	30800 N
Operating pressure	10 bar (145 Psi)
Power supply	220V-1ph-2 speed
Motor power	0,75 kW (1ph)
Rotation speed	7-16 rpm
Pre-set tyre inflating pressure	3,5 bar (50 Psi)
Net weight	400 kg
Max. overall dimensions	1900x1950x2190 mm

STANDARD ACCESSORIES

EXTENSIVE SELECTION OF STANDARD ACCESSORIES

Bead lifting lever • Lube paste bucket and Brush • Plastic protectors for mounting/demounting tool • 2 Protectors for bead breaker shovel • Jaw protectors for alloy rims • Lubricator + Pressure regulator • Bucket support

GIULIANO
AUTOMOTIVE EQUIPMENT

THE HARD DUTY LINE

THE REAL "WORK-HORSE" FOR YOUR TYRE SHOP!!

NEW

SX234 PRO DUO LNL

HIGH PERFORMANCE SUPER-AUTOMATIC LEVER - NO LEVER TILT BACK TYRE CHANGER WITH COMBINED TWO ASSIST ARMS AND POWERX

COMING SOON...

Discover on our website!

Suitable for Tubeless tyre bead seating system (optional)

Motoinverter

MOTOINVERTER
Faster, more accurate and reliable drive for your tyre changer.

Available in 3ph-2 speed, 1ph-2 speed (inverter) and 1ph - 1 speed version

5 YEAR WARRANTY

5 YEAR WARRANTY ON POWERX
5 YEAR WARRANTY ON GEARBOX

100% Made in Italy

Available in:
- Blue Trim
- BlackTrim
- Red Trim

- Robotic pipe for operating arm positioning/lock
- QuadraLock system for total stiff locking of horizontal and operating arm.
- Tilting tower, sliding horizontal arm with ø 41 mm operating arm
- Reinforced Chassis and Tower
- **Lever-No-Lever** tyre mounting/demounting system [**Giuliano Patent**], (standard).
- Tabletop thickness 14 mm with **POWER X** four cylinders clamping system [**Giuliano Patent**].

wdk Approved

Equipped with **Help** and **Press Arm** powerful pneumatic helper systems, to enhance tyre changer's performance and provide a valuable support in mounting/demounting most difficult tyre applications in the market, such as Run Flat, UHP and low profiled tyres.

POWER X grants double (uniform) clamping power on jaws, and an almost endless durability and reliability of your turntable!!!

Patented **PO SYSTEM** (standard) automatically moves the bead breaker shovel back to the starting position, after its penetration.

- Bead breaker double effect Cylinder ø 200 mm.
- Adjustable bead breaker shovel stroke.

- "Easy Access" extractable pedal box for quick service
- Fixed roller plate, to ease bead breaking of heavy wheels (standard)

Intensive use

220V-1ph 2V

- Double rotation speed by pedal
- Tyre inflation by pedal (standard)

A very practical **Wheel Lifter** reduces effort and increases productivity (optional).

STANDARD FEATURES

Rim clamping from outside	10" - 27"
Rim clamping from inside	12" - 29"
Max. tyre diameter	1120 mm (44")
Max. tyre width	406 mm (16")
Bead breaker cylinder force at 10 Bar	30800 N
Operating pressure	10 bar (145 Psi)
Power supply	220V-1ph-2 speed
Motor power	0,75 kW (1ph)
Rotation speed	7-16 rpm
Pre-set tyre inflating pressure	3,5 bar (50 Psi)
Net weight	420 kg
Max. overall dimensions	1900x1950x2190 mm

STANDARD ACCESSORIES

EXTENSIVE SELECTION OF STANDARD ACCESSORIES

Bead lifting lever • Lube paste bucket and Brush • Plastic protectors for mounting/demounting tool • 2 Protectors for bead breaker shovel • Jaw protectors for alloy rims • Lubricator + Pressure regulator • Bucket support

Giuliano Industrial S.p.A: Via Guerrieri, 6 - 42015 CORREGGIO (RE) ITALY
Tel. +39 0522 731111 - Telefax +39 0522 633109 - E-mail: info@giuliano-automotive.com - Internet: www.giuliano-automotive.com

07/2021

AUTOMOTIVE EQUIPMENT

Profession : Passion